Conbextra® GP2

constructive solutions

Free flow, high strength, non-shrink, cementitious precision grout

Uses

Conbextra GP2 is used for precision grouting where it is essential to withstand static and dynamic loads. Typical applications would be the grouting of base plates of turbines, compressors, boiler feed pumps etc., It can also be used for anchoring a wide range of fixings. These include masts, anchor bolts and fence posts.

Advantages

- Gaseous expansion system compensates for shrinkage and settlement in the plastic state
- No metallic iron content to cause staining
- Pre-packed material overcomes onsite batching variations
- Develops high early strength without the use of chlorides
- High ultimate strength ensure the durability of the hardened grout
- Free flow ensures high level of contact with load bearing area

Description

Conbextra GP2 is supplied as a ready to use dry powder. The addition of a controlled amount of clean water produces a free flowing, non-shrink grout for gap thicknesses up to 100mm.

Conbextra GP2 is a blend of Portland cement, graded fillers and chemical additives which impart controlled expansion in the plastic state whilst minimising water demand. The low water demand ensures high early strength. The graded fillers are designed to assist uniform mixing and produce a consistent grout.

Technical support

An experienced technical advisory team is available to give technical service on request.

Properties

Compressive strength : (BS 1881 - Part 116: 1983)

	Compressive strength (Nmm²)	
Age (days)	**Consistency**	
	Flowable (W/P 0.18)	**Pourable (W/P 0.165)**
1	24	27
3	45	54
7	55	66
28	65	78

Compressive strength with addition of aggregates

Age (days)	**Compressive strength (N/mm²) W/P 0.18 % of aggregates (IS 516 - 1959)**		
	50%	75%	100%
1	28	30	32
3	50	52	55
7	60	63	68
28	70	75	78

Flexural strength (BS 4551, 1998)

Age (days)	**Flexural strength (N/mm²) W/P 0.18**
1	2.5
3	7.0
7	9.0
28	10.0

Tensile strength (W/P - 0.18)	3.5N/mm² @ 28 days
Pullout bond strength (W/P - 0.18)	17 N/mm² @ 7 days 20 N/mm² @ 28 days
Time for expansion (after mixing)	Start : 20 minutes Finish : 120 minutes
Freshwet density	Approximately 2220kg/m³ depending on actual consistency used
Young's modulus (ASTM D469 - 94)	28 kN/mm²
Dynamic load resistance	Specimens of Conbextra GP2 remained undamaged even after subjecting them to alternate loads of 5N/mm² & 25N/mm² at the rate of 500 cycles / minute for two million cycles.

Conbextra® GP2

Coefficient of thermal expansion	11 x $10^{-6}/^{0}$C
Unrestrained expansion	2 - 4 % in the plastic state enables to overcome shrinkage.
Pressure to restrain plastic expansion :	0.004 N/mm² approx.

Flow characteristics : The maximum distance of flow is governed by the gap width and the head of the grout. Typical data for flow design assuming grout is poured immediately after mixing is given in the table below :

Grout consistency	Max. flow distance in mm			
	Gap width (mm)	50mm head	100mm head	250mm head
Flowable	30	350	1000	1500
	40	500	1500	2000
	50	900	2000	3000+

Note : This table is based on the following factors temperature - 30^{0}C ; Water saturated substrate; Minimum unrestricted flow width is 300mm.

Specification Clauses

Performance specification

All grouting shown on the drawing must be carried out with a pre packed cement based product which is chloride free.

It shall be mixed with clean water to the required consistency. The grout must not bleed or segregate.

A positive volumetric expansion shall occur while the grout is plastic by means of gaseous system.

Typical detail of stanchion base plate

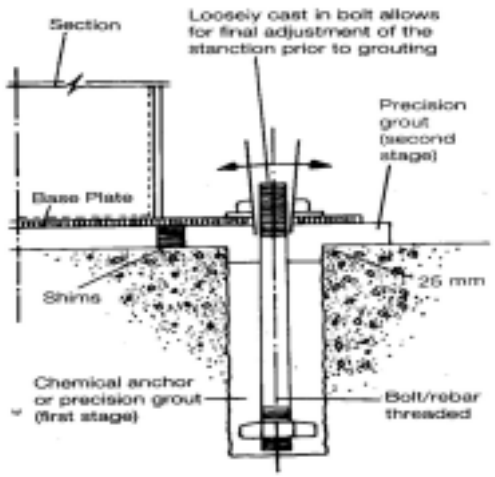

The compressive strength of the grout must exceed 50 N/mm² at 7 days and 60 N/mm² at 28 days.

The flexural strength of grout must exceed 9N/mm² @ 28 days. The fresh wet density of the mixed grout must exceed 2150 kg/m³.

The storage, handling and placement of the grout must be in strict accordance with the manufacturer's instructions.

Application instructions

Preparation

Foundation surface

The substrate surface must be free from oil, grease or any loosely adherent material. If the concrete surface is defective or has laitence, it must be cut back to a sound base. Bolt holes and fixing pockets must be blown clean of any dirt or debris.

Pre-soaking

Several hours prior to placing, the concrete substrates should be saturated with fresh water.

Immediately before grouting takes place any free water should be removed with particular care being taken to blow out all bolt holes and pockets.

Base plate

It is essential that this is clean and free from oil, grease or scale. Air pressure relief holes should be provided to

allow venting of any isolated high spots.

Levelling shims

If these are to be removed after the grout has hardened, they should be treated with a thin layer of grease.

Formwork

The formwork should be constructed to be leakproof. This can be achieved by using foam rubber strip or mastic sealant beneath the constructed formwork and between joints.

In some cases it is practical to use a sacrificial semi-dry sand and cement formwork. The formwork should include outlets for pre-soaking.

FOSROC

Conbextra® GP2

Unrestrained surface area

This must be kept to a minimum. Generally the gap width between the perimeter formwork and the plate edge should not exceed 150mm on the pouring side and 50mm on the opposite side. It is advisable, where practical, to have no gap at the flank sides.

Mixing and placing

Mixing

For best results a mechanically powered grout mixer should be used. When quantities up to 50kg are used, a heavy duty slow speed drill (400-500 rpm) fitted with a paddle is suitable.. Larger quantities will require a heavy duty mixer.

To enable the grouting operation to be carried out continuously, it is essential that sufficient mixing capacity and labour are available. The use of a grout holding tank with provision to gently agitate the grout may be required.

Consistency of grout mix

The quantity of clean water required to be added to a 25kg bag to achieve the desired consistency is given below :

Pourable : 4.125 litres

Flowable : 4.500 litres

The selected water content should be accurately measured into the mixer. The total content of the Conbextra GP2 bag should be slowly added and continuous mixing should take place for 5 minutes. This will ensure that the grout has a smooth even consistency.

Placing

At 30^{0}C place the grout within 20 minutes of mixing to gain full benefit of the expansion process.

Conbextra GP2 can be placed in thicknesses up to 100mm in a single pour when used as an underplate grout.

For thicker sections it is necessary to fill out Conbextra GP2 with well graded silt free aggregate to minimise heat build up. Typically a 10mm aggregate is suitable. 50 - 100% aggregate weight of Conbextra GP2 can be added.

Any bolt pockets must be grouted prior to grouting between the substrate and the base plate.

Continuous grout flow is essential. Sufficient grout must be prepared before starting. The time taken to pour a

batch must be regulated to the time to prepare the next one.

Typical hopper system

Removable hopper : For large pours the grout may be hand placed or pumped into a removable hopper (trough)

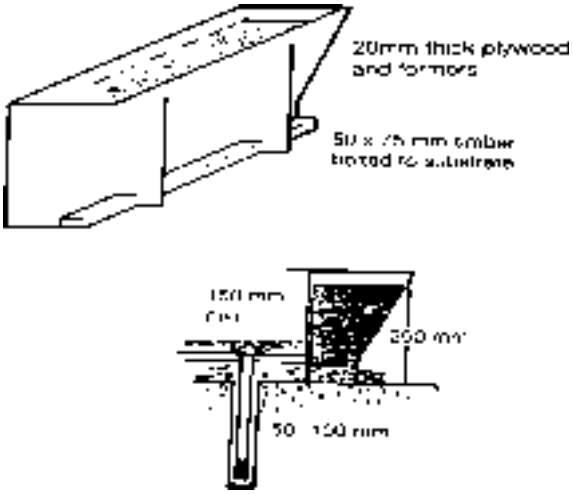

Pouring should be from one side of the void to eliminate any air or presoaked water becoming trapped under the base plate. It is advisable to pour the grout across the shortest distance of travel. The grout head must be maintained at all times so that a continuous grout front is achieved.

Where large volumes have to be placed Conbextra GP2 may be pumped. A heavy duty diaphragm pump is

recommended for this purpose. Screw feed and piston pumps may also be suitable.

Curing

On completion of the grouting operation, exposed areas should be thoroughly cured. This should be done by the use of Concure WB curing membrane, continuous application of water and/or wet hessian.

Conbextra® GP2

Limitations

Low temperature working

When the air or contact surface temperatures are 10^{0}C or below on a falling thermometer, warm water (30 - 40^{0}C) is recommended to accelerate strength development.

For ambient temperature below 10^{0}C the formwork should be kept in place for at least 36 hours.

Normal precautions for winter working with cementitious materials should then be adopted.

High temperature working

At ambient temperatures above 40^0 C, cool water (below 20^{0}C) should be used for mixing the grout prior to placement.

Estimating

Packaging

Conbextra GP2 is supplied in 25 kg moisture resistant bags.

Yield

Allowance should be made for wastage when estimating quantities required. The approximate yield per 25 kg bag for different consistency is :

Consistency	Pourable	Flowable
Yield (litres)	12.5	13.3

Storage

Shelf life

Conbextra GP2 has a shelf life of 6 months if kept in a dry store in sealed bags. If stored in high temperature and high humidity locations, the shelf life may be reduced.

Precautions

Health and Safety instructions

Conbextra GP2 is alkaline and should not come into contact with skin and eyes. Inhalation of dust during mixing should be avoided.

Gloves, goggles and dust mask should be worn.

If contact with skin occurs, it shall be washed with water. Splashes to eyes should be washed immediately with plenty of clean water and medical advice sought.

Fire

Conbextra GP2 is non flammable.

Additional information

For further details about the use and selection of grouts refer to the Fosroc Information module entitled 'Precision grouting in the Construction industry'.

® Denotes the trademark of Fosroc International Limited

Important note :
Fosroc products are guaranteed against defective materials and manufacture and are sold subject to its standard terms and conditions of sale, copies of which may be obtained on request. Whilst Fosroc endeavours to ensure that any advice, recommendation specification or information it may give is accurate and correct, it cannot, because it has no direct or continuous control over where or how its products are applied, accept any liability either directly or indirectly arising from the use of its products whether or not in accordance with any advice, specification, recommendation or information given by it.

Fosroc Chemicals (India) Pvt. Ltd.
Head Office
'Vishnu Chittam', No. 10, 2nd Floor
Sirur Park B Street, Seshadripuram
Bangalore 560020
www.fosroc.com

telephone	fax	e-mail
++91 80-2334 3188	++91 80-2334 3178	india@fosroc.com

Regional Offices

Bangalore
'Vishnu Chittam', No.10, 1stFloor
Sirur Park B Street, Seshadripuram
Bangalore 560 020
Ph:080-2334 3188
Fax : 080-23368667
email: Bangalore@fosroc.com

Mumbai
208/209, Persepolis
Sector 17, Vashi
Navi Mumbai 400 703
Ph:022-2789 6411/12
Fax: 022 - 2789 6413
email:Mumbai@fosroc.com

Delhi
109-113, 1st Floor, Vikrant Towers
4, Rajendra Place
New Delhi 110 008
Ph:011- 45062000-5
Fax: 011- 45062001
email:Delhi@fosroc.com

Kolkata
P-569, Lake Terrace Extn.
First Floor
Kolkata 700 029
Ph: 033 24650917 / 55343188
Fax: 033-24650891
email:Kolkata@fosroc.com

● Ahmedabad : (079) 26762799 ● Ankleshwar :(02646) 220704/224687 ● Bellary: 09845891690 ● Bhubaneshwar : (0674) 2521176
● Chennai : (044) 24899949/24853383 ● Chandigarh : (0172) 2639360 ● Cochin : (0484) 2347465 ● Coimbatore : (0422) 2472966
● Goa : (0832) 09423058696 ● Guwahati : (0361) 2462866 ● Hyderabad : (040) 27662324/27662425 ● Indore : (0731) 4049339
● Jaipur : (0141) 2336103 ● Lucknow :(0522) 2239044 ● Nagpur: (0712) 2753510/2563242 ● Visakhapatnam : (0891) 2564850 / 2707607

INDIA/0302/D